CanadaDocks.ca

ACCESS PLATFORM

Ⓐ 8' CanadaDocks™ Aluminum Trusses	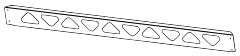	X2
Ⓑ Square Aluminum Tube		X4
Ⓒ End Plates	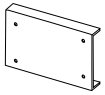	X2
Ⓓ Thruflow™ - 1x4 Interlocking Panels	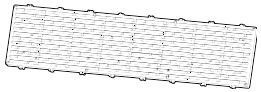	X2

Ⓔ 3/8" X 3 ½" Carriage Bolts		X16
Ⓕ 3/8" K-Locknuts		X16
Ⓖ Brackets	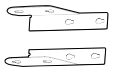	X2
Ⓗ #12x 2" Self Drilling Tek Screws		X16
Ⓘ #12x¾" Self Drilling Tek Screws		X7
Ⓙ P-Bumper (8 Foot Length)		X1
Ⓚ Corner Bumper	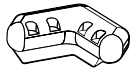	X2
Ⓛ #10 x 1" Trim Screws	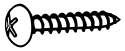	X22
Ⓜ Joist (1 Ft Long)	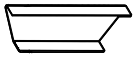	X1
Ⓝ Leg Cap		X4

TOOLS REQUIRED:

9/16" Wrench or
9/16" Socket with Ratchet

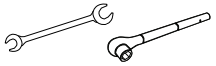

#2 & #3 Phillips Drill Bit
with Drill *

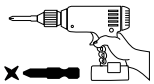

Locking Pliers

Utility Knife

Measuring Tape

* Phillips Drills Bit is included with the kit

INSTRUCTIONS FOR FLOAT AND JOIST INSTALLATION ONLY:

1 Layout your Accessiblity Platform parts on a flat area .

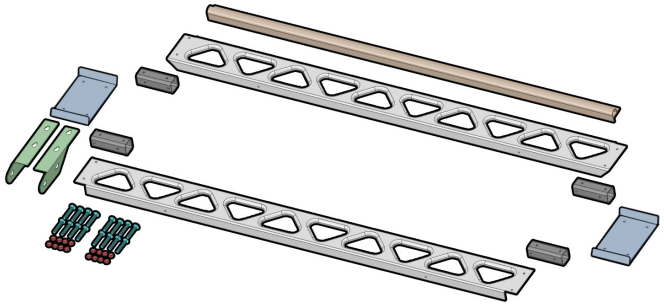

Layout your accessibility platform on a flat area for assembly.

2

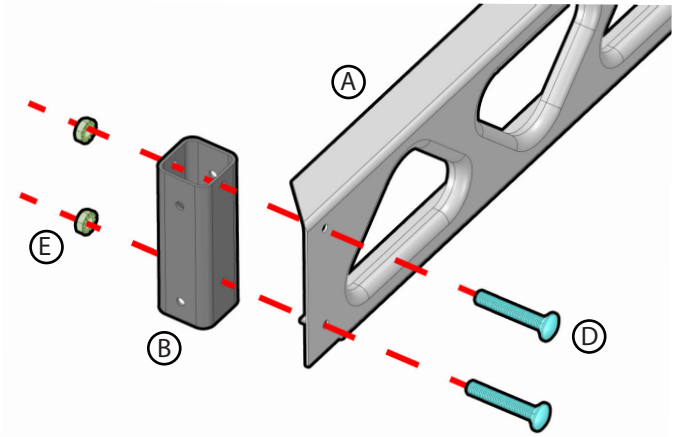

Place the Square Tubes(B) against the Truss(A). Align the holes on both the Square Tube and Truss. Insert Carriage Bolts(E) through the Truss(A) and Leg Stub(B). Fasten with Lock Nuts(F). Repeat this step for each end of both Trusses(A).

3

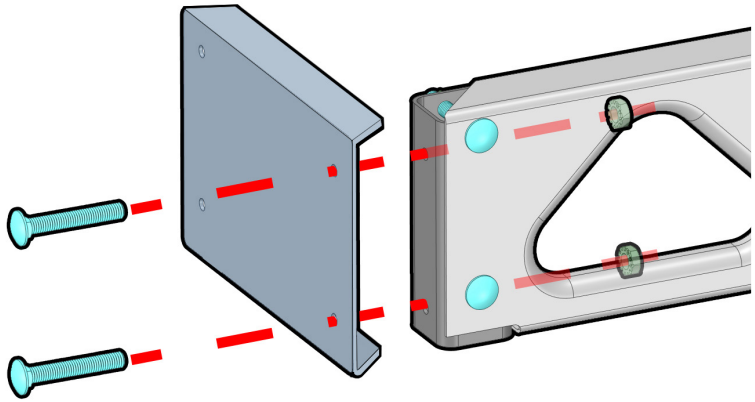

Place the End Plate(C) against the side of the Square Tube(B). Align the holes on both the End Plate(C) and Square Tube(B) . Insert Carriage Bolts(E) through the End Plate (C) and Leg Stub(B). Fasten with Lock Nuts(F). Repeat this step for both sides of the Truss.

4

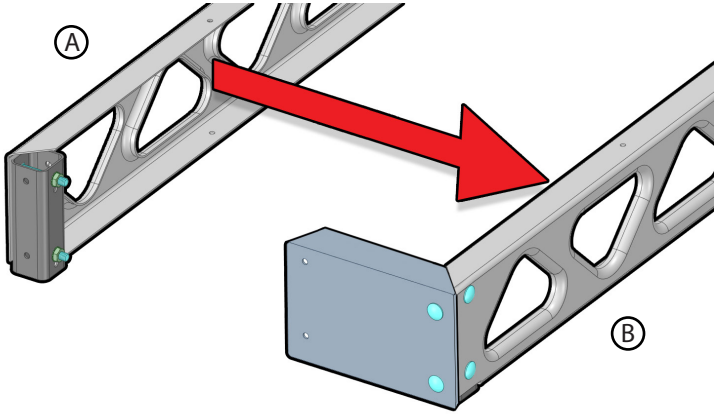

Slide Truss A into Truss B.

5

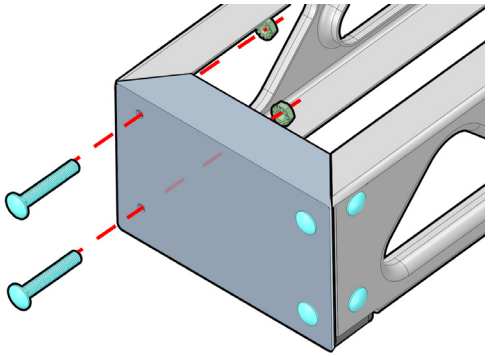

Align the holes on both the End Plate(C) with the Square Tube(B) . Insert Carriage Bolts(E) through the End Plate(C) and Square Tube(B). Fasten with Lock Nuts(F). Repeat this step for both ends of the Truss. PLEASE NOTE: Only hand tighten the Carriage Bolts as the Nuts will be loosened in Step 14.

6

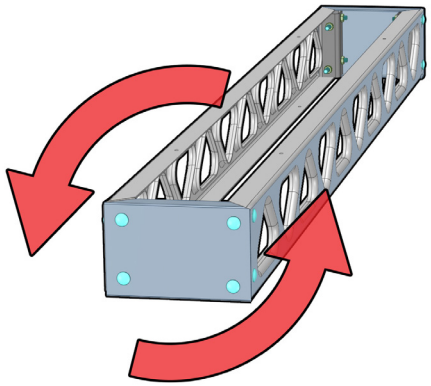

Rotate frame so the bottom is sitting upwards.

7

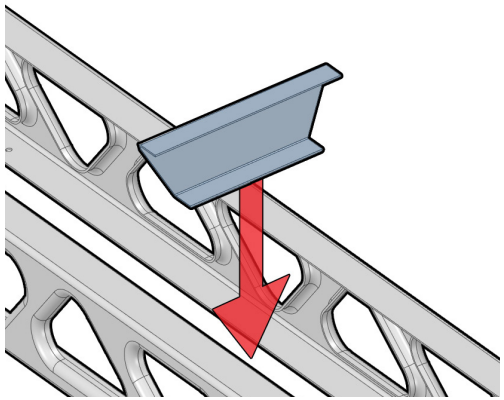

Place the Joist(M) in the middle of the access platform frame (48" from edge of frame).

8

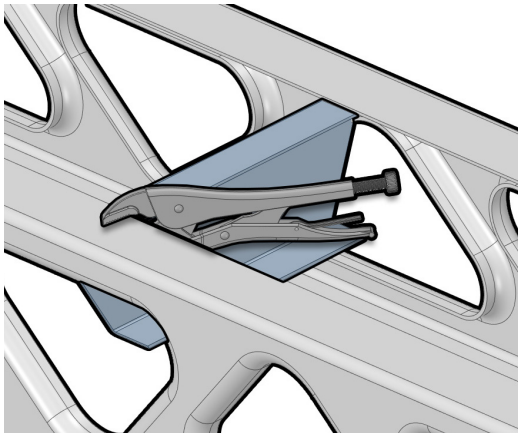

Use locking pliers to hold the joist against the truss.

9

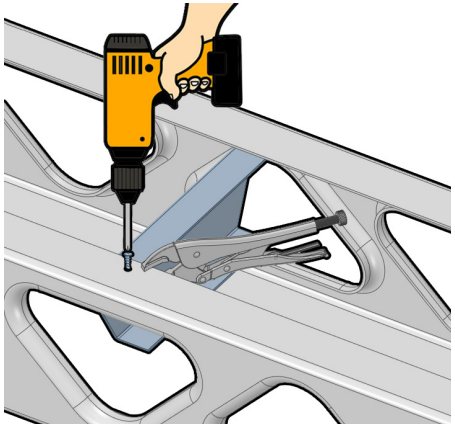

Add a #12x3/4"screw (I) to fasten the joist in place.
Repeat Steps 8 & 9 for the opposite end of the joist.

10

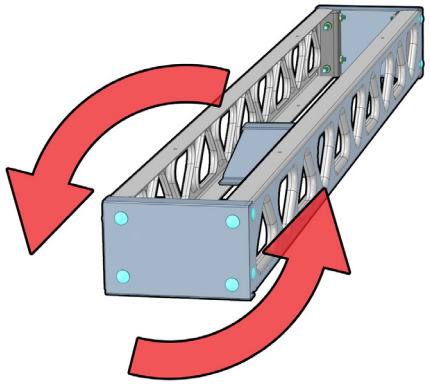

Rotate frame so the top is sitting upwards.

11

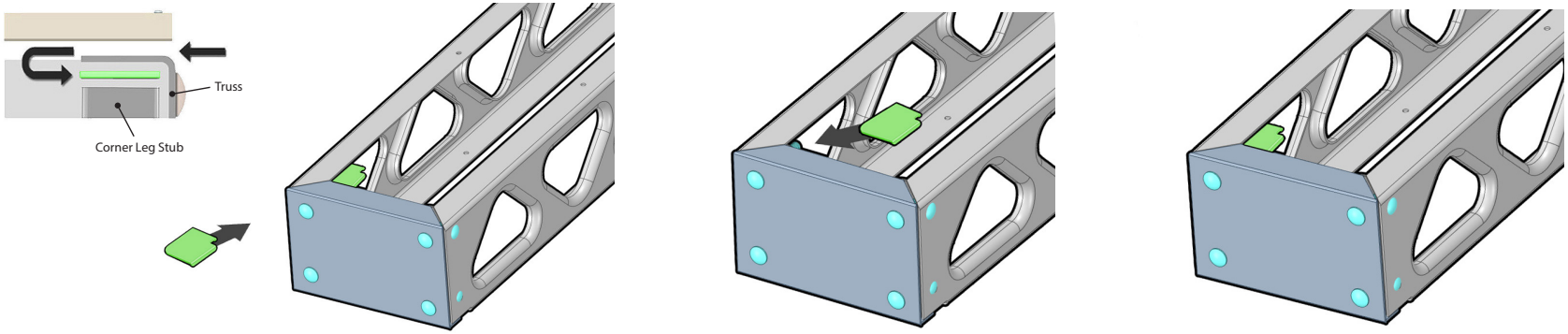

Install Leg Cap (N) into each corner of the dock frame. Slide the Metal Corner Insert between the lip of the truss frame and the corner leg stub (See sideview image above). PLEASE NOTE: The insert in the above image had been depicted in green for visibility purposes.

12

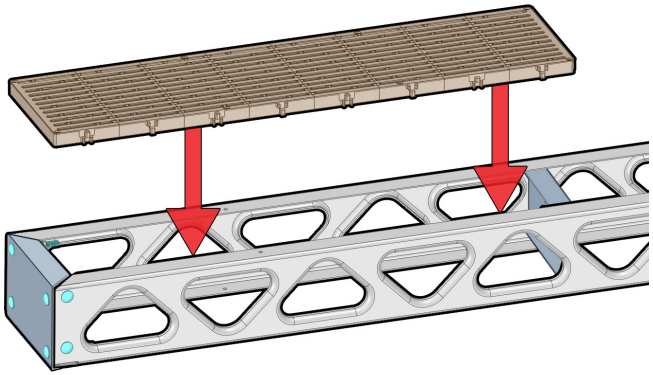

Place the 1st sheet of Thruflow™ decking(D) unto the Access Platform frame. Align with edges of the Access Platform frame.

13

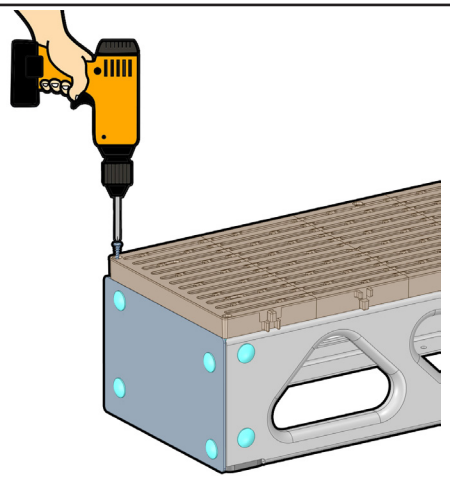

Attach the Thruflow™ Decking(D) using a Drill and 12x 2"Tek Screws(H). See chart in Step 8 for screw placement on Thruflow decking.

14

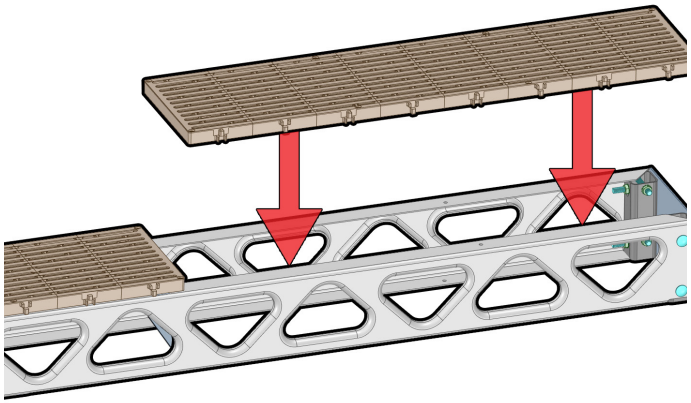

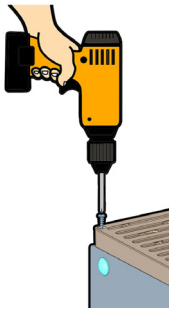

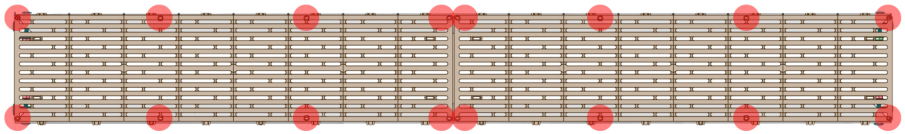

Place the 2nd sheet of Thruflow™ decking(D) unto the Access Platform frame. Align with edges of the Access Platform frame and the1st sheet of Thruflow™. Attach the Thruflow Decking(D) using a drill, Phillips drill bit and 2"Tek screws(H). See chart above for screw placement for Thruflow™ decking.

14

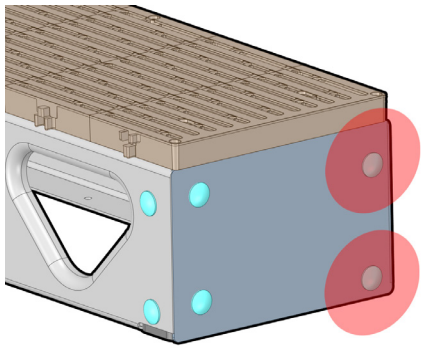

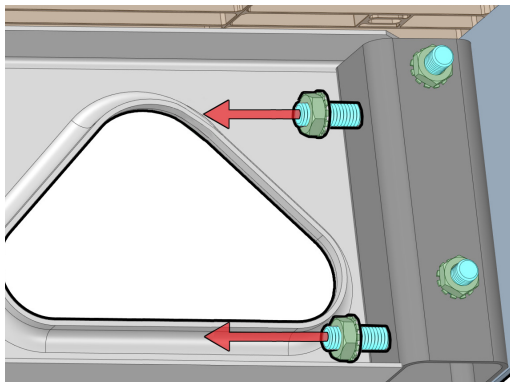

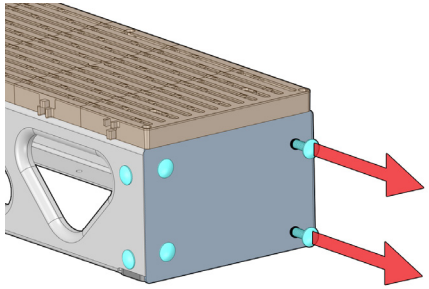

Move bolts 1/2"
outwards from frame

Loosen the nuts on the back of the Access Platform. Do this for both sets of Carriage bolts on either side of the dock. Tap the Carriage Bolts(E) on the inside of the access platform frame approximately 1/2" out from the frame to accomodate the brackets to be installed in the next Step.

15

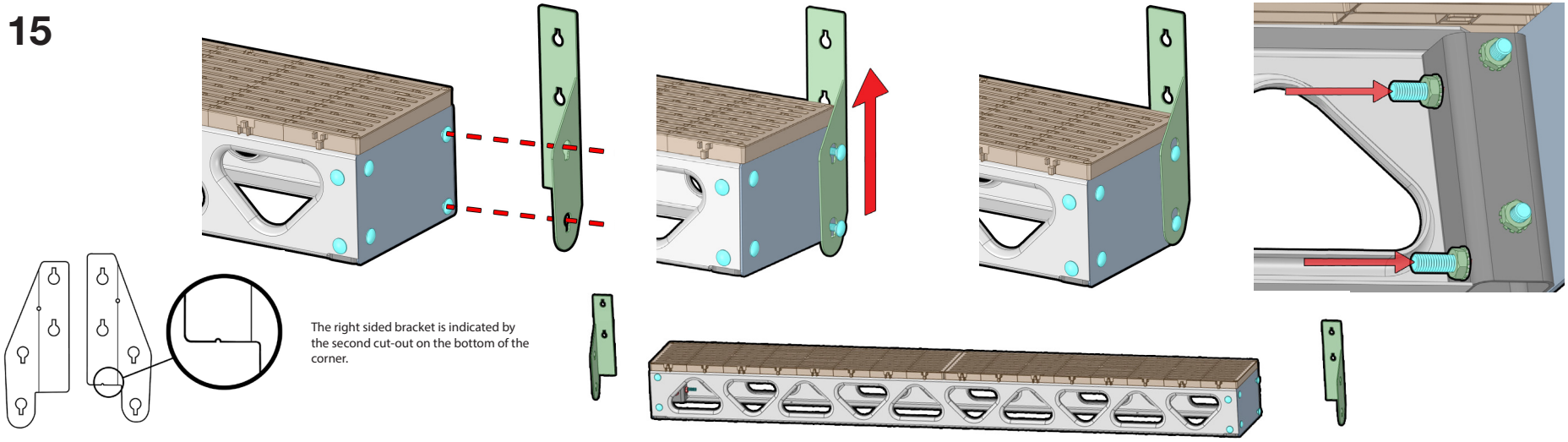

Fit the bracket over the the Carriage Bolts(E) (See above image). Pull the Bracket upwards until the Carriage Bolt heads slip into the narrow slots of the Bracket. Fasten the existing nuts and retighten the Carriage Bolts in this position. Perform this Step for both sides of the Access Platform.
PLEASE NOTE: Brackets will be marked L & R (Left and Right) to denote where each bracket will be placed.

16

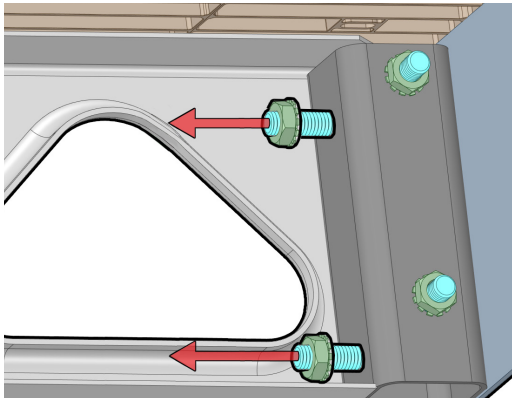

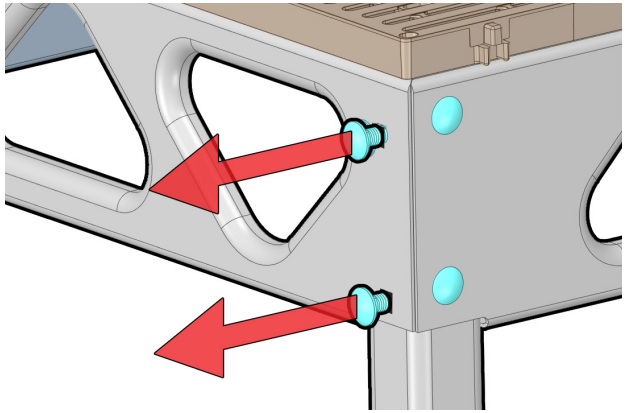

On the dock, loosen the Nuts on the Square Tubes where the Access Platform will be attached (See above image). Pull the Carriage Bolts out approximately 1/2" from the frame to accomodate the brackets installed in the next Step.

17

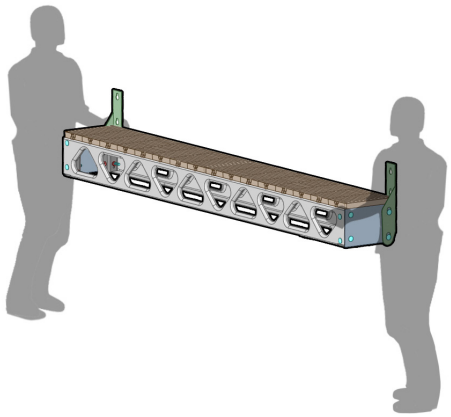

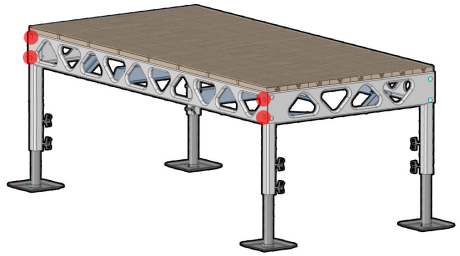

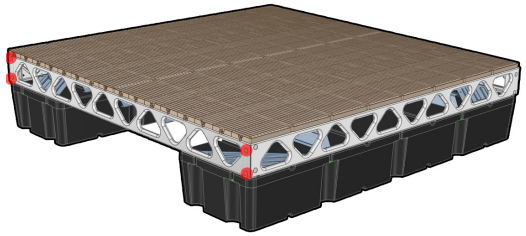

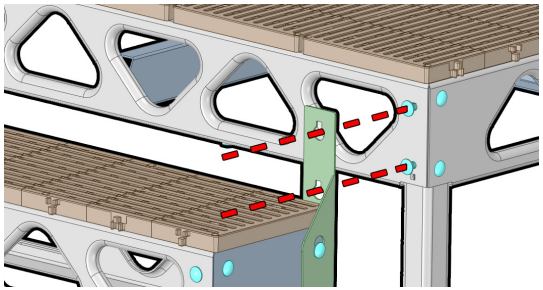

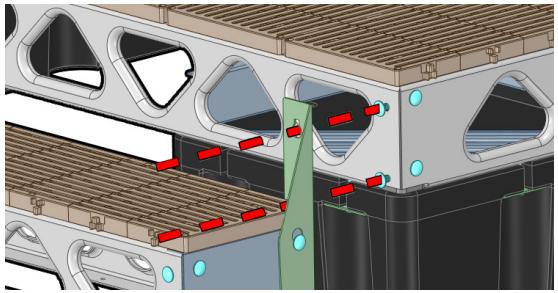

Using two people lift the Access Platform and align it next to the dock. Align the bracket holes with the Carriage Bolts on the dock (See image above). When the Carriage Bolts are resting inside the brackets slowly place the Access Platform down until the Carriage Bolts heads rest on both brackets. Slip the Carriage Bolts into the narrow slots of the Brackets. PLEASE NOTE: The heads of the carriage bolts may have to be turned slightly to fit into the narrow slots.

18

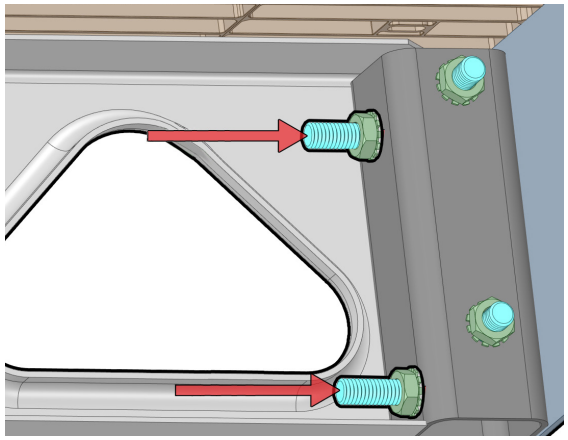

Fasten the existing nuts and retighten the Carriage Bolts.

19

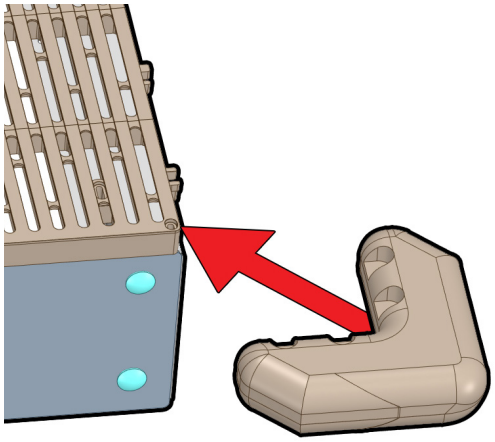

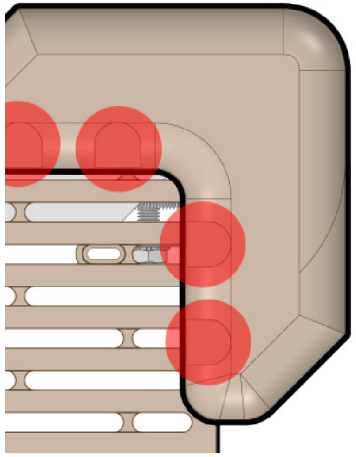

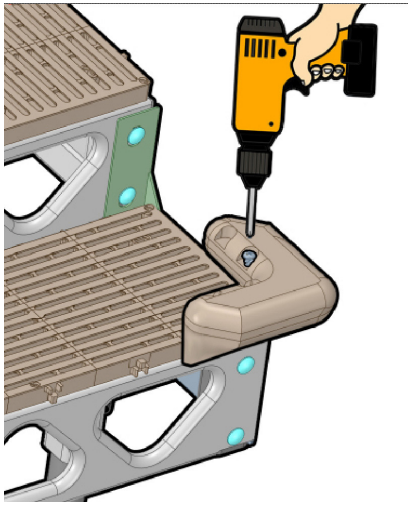

Place a Corner Bumper(K) on the corner of the dock. Slip the indented lip of the Corner Bumper (K) against the edge of the dock. Fasten a 1" screw(L) for each indent on the top of the Corner Bumper. Do this for both corners on the Access Platform.

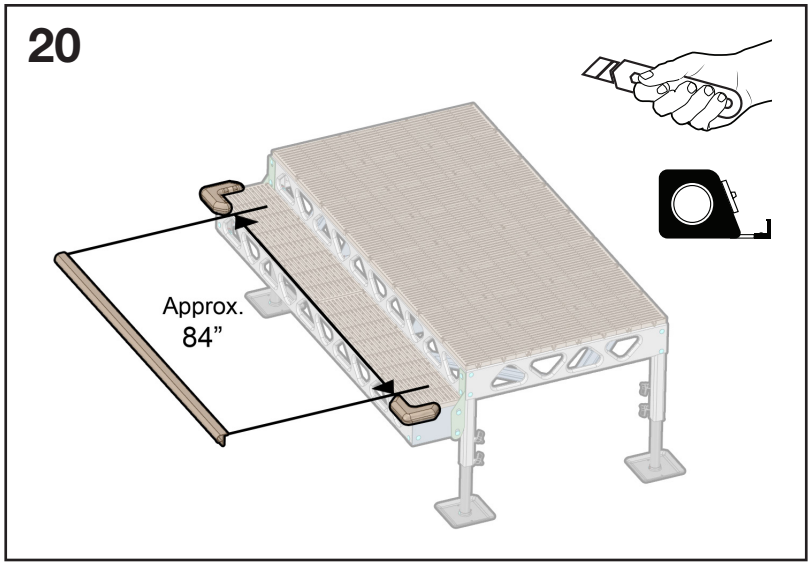

Measure the distance between the two Corner Bumpers (This should be approximately 84”). Measure and cut a length of P-Bumper(J) strip this length using a utility knife.

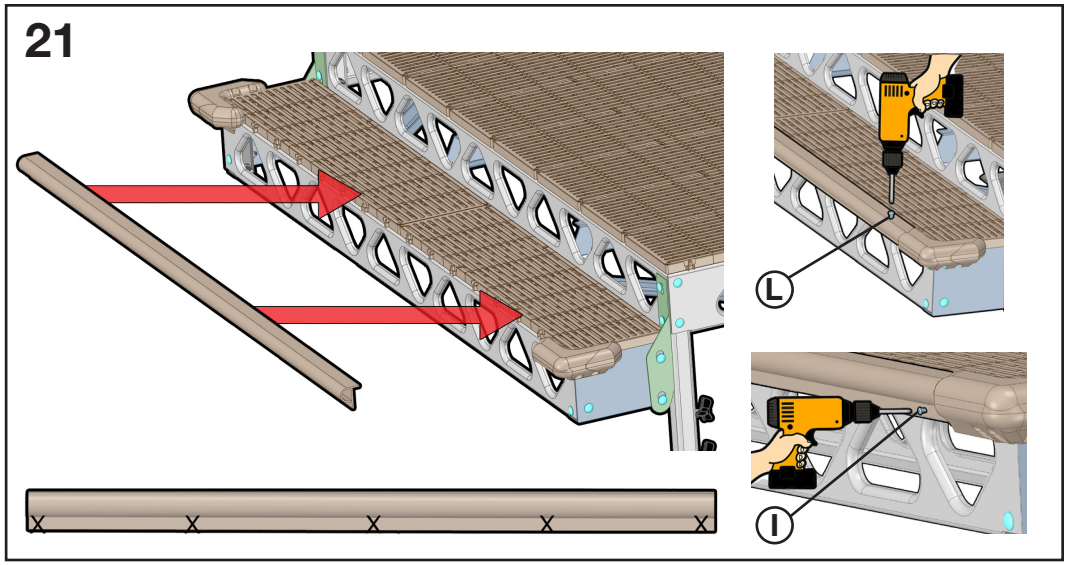

Place the P-Bumper(J) along the edge of the Access Platform. Starting two inches from the edge fasten Screws(L) at 6 inch intervals on the top of the P-Bumper. For the bottom of the P-Bumper add Screws(I) at 1 Foot intervals starting two inches from the edge.